CRANES AND COMPONENTS

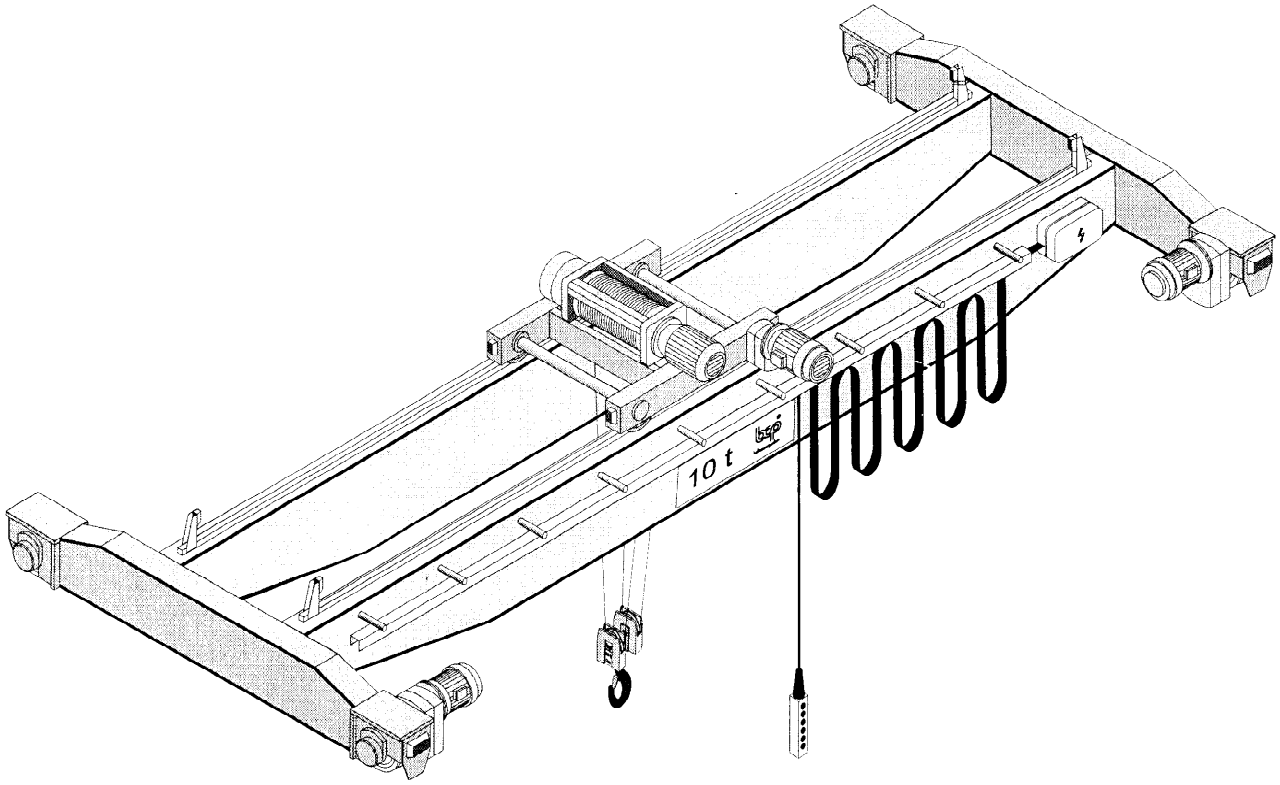

balkancarpodem

CONTENTS

INTRODUCTION. 1

1. SINGLE GIRDER STANDING OVERHEAD TRAVELING CRANES 2

2. DOUBLE GIRDER STANDING OVERHEAD TRAVELING CRANES 4

3. SINGLE GIRDER STANDING CRANES - LIGHT TYPE 6

4. SINGLE GIRDER SUSPENSION OVERHEAD TRAVELING CRANES 8

5. DOUBLE RAIL CRANE CRAB 10

6. BLOCK TRAVEL WHEELS 12

7. MAXIMUM ADMISSIBLE STATIC LOADINGS ON TRAVEL WHEEL - Rmax (kg) AND TORQUES - M (Nm) 13

8. MONORAIL CRANE CRABS 14

Notice

INTRODUCTION

The present catalogue includes unified single and double girder, standing and suspension general-purpose overhead traveling cranes. The cranes and their components are in series production; they are included in the production line of BALKANCARPODEM LTD, Sofia.

The cranes have light construction, based on:
- wire rope electric hoists,
- block travel wheels
- and geared motors.

All cranes are equipped with squirrel-cage induction motors, thus allowing the use of a simple circuit diagram and control.

The cranes are designed to:
- operate in medium mode of operation - 2m as per FEM and DIN;
- standard and tropical execution;
- surrounding temperature within the range of -20C to +40C;
- power supply 3Ph 380V 50Hz.

We are also able to supply the cranes and their components for different voltage and frequency parameters.

The cranes and their components are supplied with one rated speed or two rated speeds (rated and creep). The cranes we show in the present catalogue are designed with control from the floor. We are in position to supply cranes with control from cabin at customer's request. Customers may order electric hoists with additional equipment:
- load limiter
- or (and) additional thermal protection of the lifting electric motor.

The cranes are not designed for handling liquid metal, loads with high temperature, dangerous loads (poisonous, explosive, etc.). Cranes cannot operate in explosive and fiery surroundings.

We are ready to discuss with customers the supply of overhead traveling cranes with parameters, mode of operation and designation different from these given in the present catalogue i.e. cranes equipped with electric magnet, gripper, etc.

We are in position to negotiate also the supply of different types of components and cranes:
- single girder or double girder gantry (jib) cranes,
- bracket cranes - column or wall type,
- special cranes,
- etc.

All hoisting units are designed on the basis of wire rope electric hoists, conforming to the norms of FEM, ISO and the Bulgarian State Standards /BSS/. Our products have TÜV certification and the CE mark. We show MH and MHM electric hoists in our catalogue.

Our products conform to the following norms:
- 98/37/EC from 22.06.98 - Machinery Directive
- EN 292 - Safety of machinery

Specialized laboratories, issuing the respective certificates perform the testing of the materials of the supporting elements - they are tested for their mechanical properties and chemical compound.

The electrodes and the welding seams of the welded constructions are made under control, to prove their quality.

***REMARK**: The manufacturer reserves the right to alter the above stated components at his judgment.*

1. SINGLE GIRDER STANDING OVERHEAD TRAVELING CRANES

1.1. Main parameters and dimensions

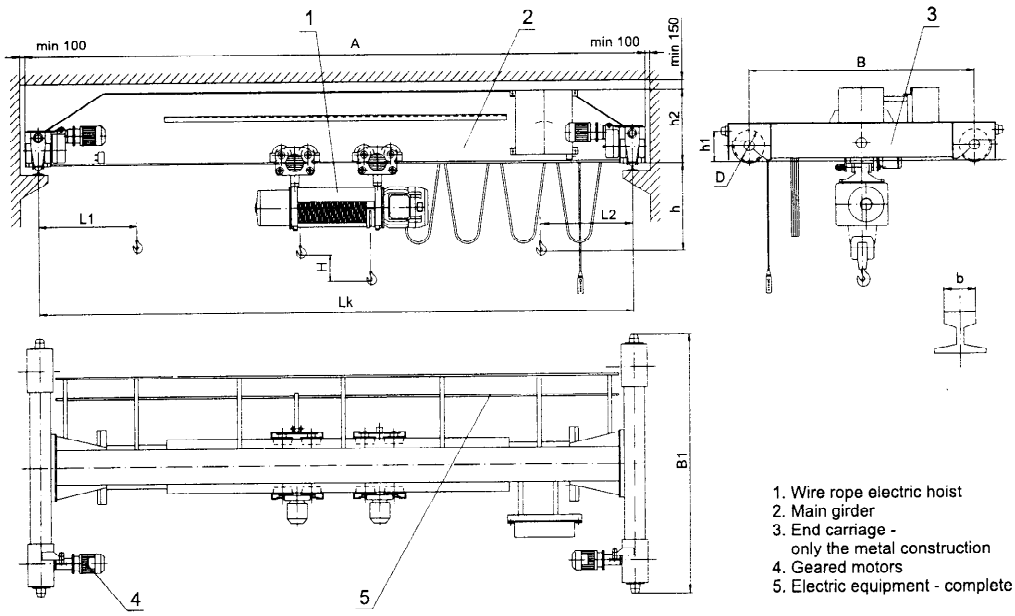

1. Wire rope electric hoist - 1 unit
2. Main girder - 1 unit
3. End carriage - only the metal construction - 2 unit
4. Geared motors - 2 unit
5. Electric equipment - complete - 1 unit

Designation	Capacity, Q	Span Lk	Lifting height H	Speeds			Dimensions								Rmax (Maximum pressure on travel wheel)
				of lift	of crab	of crane	A	B	B1	D	b	h	h1	h2	
-	t	m		m/min			mm								kN
BCE-B 5/10,5	5	10,5	7 ... 40	8	20	20/6	10780	2000	2340	160	40	1505	160	520	35
BCE-B 5/16,5		16,5		8/2	20/6		16780	3000	3340					675	38
BCE-B 5/22,5		22,5					22840	4000	4380	200	50		200	820	41
BCE-B 5/28,5		28,5					28840	4000	4380					1050	45
BCE-B 6,3/10,5	6,3	10,5	5 ... 18	4	20	20/6	10840	2000	2380	200	50	1275	200	615	42
BCE-B 6,3/16,5		16,5		4/1	20/6		16840	3000	3380					815	45
BCE-B 6,3/22,5		22,5					22840	4000	4380					970	48
BCE-B 6,3/28,5		28,5					28840	4000	4380					1050	53
BCE-B 8/10,5	8	10,5	7 ... 34	8	20	20/6	10840	2000	2380	200	50	1725	200	615	50
BCE-B 8/16,5		16,5		8/2	20/6		16840	3000	3500	250			250	815	54
BCE-B 8/22,5		22,5					22840	4000	4500					970	59
BCE-B 8/28,5		28,5					28840	4000	4500					1050	65
BCE-B 10/10,5	10	10,5	5 ... 20	4	20	20/6	10840	2000	2500	250	50	1580	250	675	63
BCE-B 10/16,5		16,5		4/1	20/6		16840	3000	3500					970	68
BCE-B 10/22,5		22,5					22870	4000	4500					980	75
BCE-B 10/28,5		28,5					28870	4000	4500					1110	80
BCE-B 12,5/10,5	12,5	10,5	8 ... 17	4	20	20/6	10840	2000	2500	250	50	1710	250	770	79
BCE-B 12,5/16,5		16,5		4/1	20/6		16840	3000	3500					970	82
BCE-B 12,5/22,5		22,5					22870	4000	4590	320			290	980	89
BCE-B 12,5/28,5		28,5					28870	4000	4590					1250	95

Remarks:

*) Sizes L1 and L2 depend on the hoist type and the lifting height

BALKANCARPODEM Ltd *1040 Sofia, Bulgaria; 18, Kliment Ohridski Blvd.*

1.2. End carriages

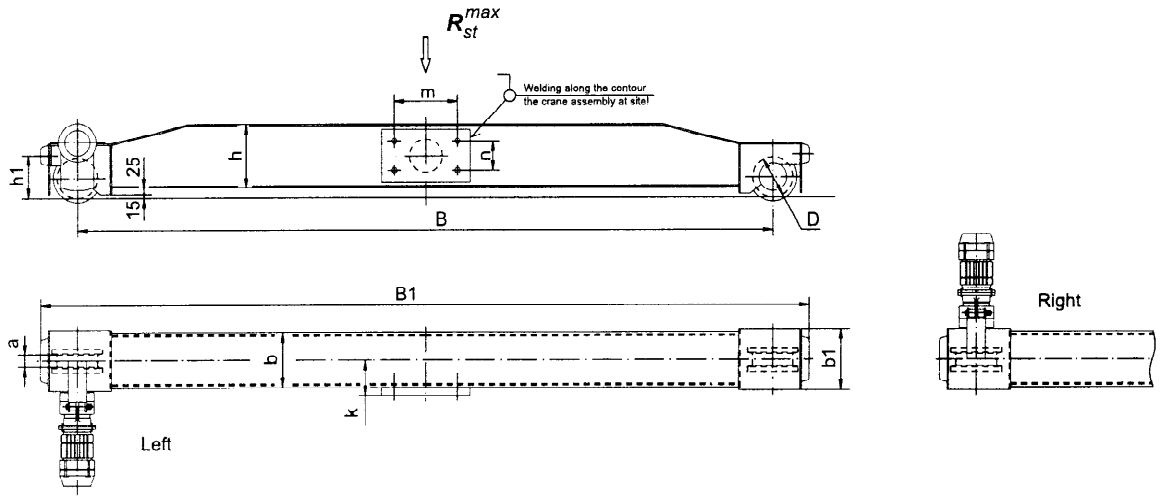

Designation	Capacity, Q	Span Lk	Speeds	Geared motor		Dimensions											R_{st}^{max}
				Type	Output	D	B	B1	a	b	h	b1	h1	k	m	n	
-	t	m	m/min	-	kW	mm											kN
ECE-B 00	5	10,5	20/6	TP1200-35 T90S-12/4	0,18/0,55	160	2000	2340	55	240	280	240	160	150	600	140	79
ECE-B 01		16,5					3000	3340			330					190	80
ECE-B 02		22,5		TP1250-46 T90S-12/4		200	4000	4380	65	270	400	270	200	165		260	83
ECE-B 03		28,5					4000	4380			420					280	112
ECE-B 04	6,3	10,5	20/6	TP1250-46 T90S-12/4	0,18/0,55	200	2000	2380	65	250	280	270	200	155	600	140	87
ECE-B 05		16,5					3000	3380		270	330			165		190	92
ECE-B 06		22,5					4000	4380			420					280	112
ECE-B 07		28,5					4000	4380			420					280	112
ECE-B 08	8	10,5	20/6	TP1250-46 T90S-12/4	0,18/0,55	200	2000	2380	65	270	330	270	200	165	600	190	110
ECE-B 09		16,5		TP1250-54 T90S-12/4		250	3000	3500		300	400	324	250	180		260	117
ECE-B 10		22,5					4000	4500		320	460			190		320	139
ECE-B 11		28,5					4000	4500			460					320	139
ECE-B 12	10	10,5	20/6	TP1250-54 T90S-12/4	0,18/0,55	250	2000	2500	65	300	400	324	250	180	600	260	131
ECE-B 13		16,5					3000	3500		320	460			190		320	140
ECE-B 14		22,5		TP1315-54 T90L-12/4	0,25/0,75		4000	4500			520					380	165
ECE-B 15		28,5					4000	4500			520					380	165
ECE-B 16	12,5	10,5	20/6	TP1315-54 T90L-12/4	0,25/0,75	250	2000	2500	65	300	400	324	250	180	600	260	166
ECE-B 17		16,5					3000	3500		320	460			190		320	172
ECE-B 18		22,5		TP1315-70 T100LA-12/4	0,37/1,10	320	4000	4590	70		550	324	290			410	200
ECE-B 19		28,5					4000	4590			550					410	200

Remarks:

*) R_{st}^{max} - Maximum static loading (kN)

$$R_{st}^{max} \approx [\frac{G_{crane}}{2} + (Q+G_{hoist})].10 \text{ (kN)}$$

Where:

G_{crane} - crane dead weight (t);
Q - crane rated capacity(t);
G_{hoist} - el. hoist dead weight (t)

2. DOUBLE GIRDER STANDING OVERHEAD TRAVELING CRANES

2.1. Main parameters and dimensions

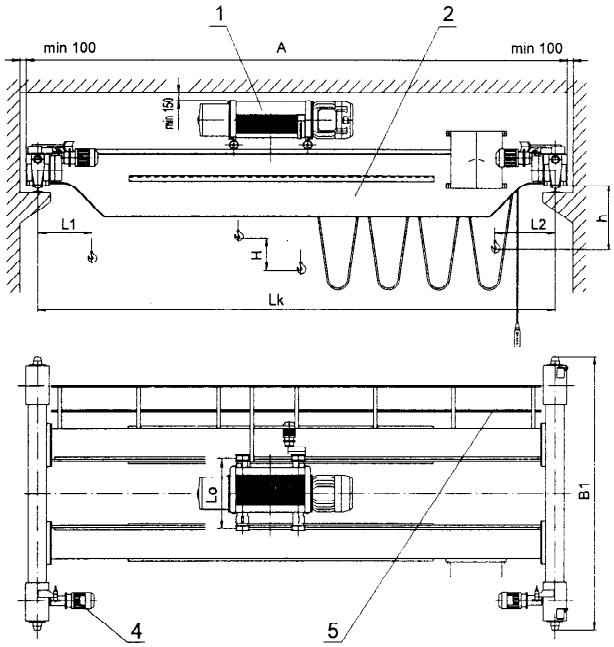

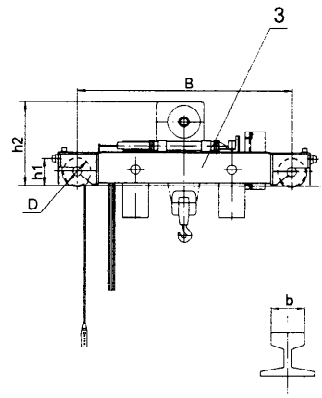

1. Crane crab - 1 unit
2. Main girder - 1 unit
3. End carriage - only the metal construction - 2 unit
4. Geared motors - 2 unit
5. Electric equipment - complete - 1 unit

Designation	Capacity, Q	Span Lk	Lifting height H	Speeds			Dimensions									Rmax (Maximum pressure on travel wheel)
				of lift	of crab	of crane	A	B	B1	D	b	Lo	h, min	h1	h2	
-	t	m		m/min			mm									kN
BCD-B 5/10,5	5	10,5	7 ... 40	8	20	20/6	10785	3500	3880	200	50	1000	248	200	1150	44
BCD-B 5/16,5		16,5		8/2	20/6		16785	3500	3880				248		1150	50
BCD-B 5/22,5		22,5					22785	4000	4380				208		1190	58
BCD-B 5/28,5		28,5					28840	4200	4695	250			188	250	1200	69
BCD-B 6,3/10,5	6,3	10,5	5 ... 18	4	20	20/6	10785	3500	3880	200	50	1000	248	200	1070	52
BCD-B 6,3/16,5		16,5		4/1	20/6		16785	3500	3880				248		1070	58
BCD-B 6,3/22,5		22,5					22840	4000	4495	250			188	250	1140	67
BCD-B 6,3/28,5		28,5					28840	4200	4695				148		1180	78
BCD-B 8/10,5	8	10,5	7 ... 34	8	20	20/6	10840	3500	3995	250	50	1000	248	250	1240	61
BCD-B 8/16,5		16,5		8/2	20/6		16840	3500	3995				248		1240	69
BCD-B 8/22,5		22,5					22840	4000	4495				188		1290	77
BCD-B 8/28,5		28,5					28840	4200	4790	320			128	290	1350	90
BCD-B 10/10,5	10	10,5	5 ... 20	4	20	20/6	10840	3500	3995	250	50	1000	193	250	1170	78
BCD-B 10/16,5		16,5		4/1	20/6		16840	3500	4090	320			173	290	1190	85
BCD-B 10/22,5		22,5					22840	4000	4590				113		1250	95
BCD-B 10/28,5		28,5					28880	4200	4830	400	70		85	370	1280	108
BCD-B 12,5/10,5	12,5	10,5	8 ... 17	4	20	20/6	10840	3500	4090	320	50	1200	163	290	1330	87
BCD-B 12,5/16,5		16,5		4/1	20/6		16840	3500	4090				163		1330	95
BCD-B 12,5/22,5		22,5					22880	4000	4630	400	70		75	370	1430	107
BCD-B 12,5/28,5		28,5					28880	4200	4830				75		1430	119
BCD-B 16/10,5	16	10,5	8 ... 17	4	20	20/6	10840	3500	4090	320	50	1200	253	290	1370	107
BCD-B 16/16,5		16,5		4/1	20/6		16880	3500	4130	400	70		253	370	1390	115
BCD-B 16/22,5		22,5					22880	4000	4630				205		1430	128
BCD-B 16/28,5		28,5					28880	4200	4830				155		1480	142
BCD-B 20/10,5	20	10,5	8 ... 17	3,2	20	20/6	10880	3500	4130	400	70	1400	205	370	1420	130
BCD-B 20/16,5		16,5		3,2/0,8	20/6		16880	3500	4130				205		1420	139
BCD-B 20/22,5		22,5					22880	4000	4630				155		1480	150
BCD-B 20/28,5		28,5					28880	4200	4830				155		1480	166

Remarks:

*) Sizes L1 and L2 depend on the hoist type and the lifting height

2.2. End carriages

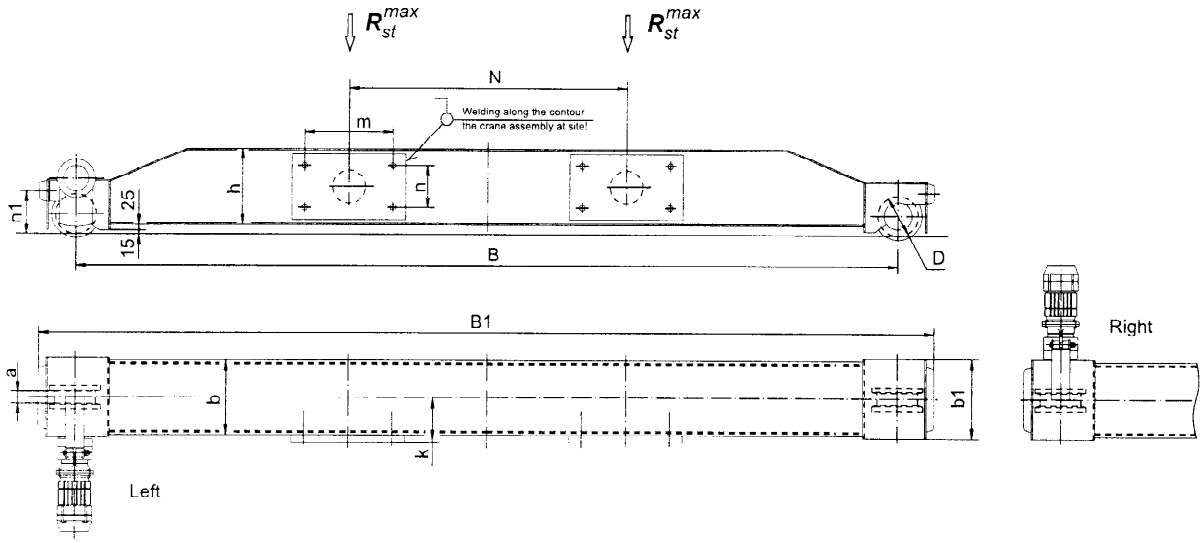

Designation	Capacity, Q	Span Lk	Speeds	Geared motor		Dimensions												R_{st}^{max}
				Type	Output	D	B	B1	a	b	b1	h,	h1	k	m	n	N	
-	t	m	m/min	-	kW	mm												kN
ECD-B 00	5	10,5	20/6	TP1250-46 T90S-12/4	0,18/0,55	200	3500	3880	65	270	270	400	200	165	330	260	1224	54
ECD-B 01		16,5					3500	3880							470		1364	54
ECD-B 02		22,5					4000	4380				440			620	300	1514	60
ECD-B 03		28,5		TP1250-54 T90S-12/4		250	4200	4695		300	324	460	250	180	710	320	1604	71
ECD-B 04	6,3	10,5	20/6	TP1250-46 T90S-12/4	0,18/0,55	200	3500	3880	65	270	370	400	200	165	330	260	1224	54
ECD-B 05		16,5					3500	3880							470		1364	73
ECD-B 06		22,5		TP1250-54 T90S-12/4		250	4000	4495		300	324	460	250	180	620	320	1514	69
ECD-B 07		28,5		TP1315-54 T90L-12/4	0,25/0,75		4200	4695		320		500		190	710	360	1604	81
ECD-B 08	8	10,5	20/6	TP1250-54 T90S-12/4	0,18/0,55	250	3500	3995	65	300	324	400	250	180	360	260	1254	73
ECD-B 09		16,5					3500	3995							470		1363	73
ECD-B 10		22,5		TP1250-54 T90L-12/4	0,25/0,75		4000	4495				460			620	320	1513	81
ECD-B 11		28,5		TP1315-70 T100LA-12/4	0,37/1,1	320	4200	4790	70	320		520	290	190	710	380	1602	94
ECD-B 12	10	10,5	20/6	TP1315-54 T90L-12/4	0,25/0,75	250	3500	3995	65	300	324	440	250	180	380	300	1273	82
ECD-B 13		16,5		TP1315-70 T90L-12/4		320	3500	4090	70			460	290		500	320	1393	100
ECD-B 14		22,5		TP1315-70 T100LA-12/4	0,37/1,1		4000	4590		320		520		190	640	380	1532	100
ECD-B 15		28,5		TP1315-86 T100LA-12/4		400	4200	4830	85	340	365	550	370	200	710	406	1601	125
ECD-B 16	12,5	10,5	20/6	TP1315-70 T90L-12/4	0,25/0,75	320	3500	4090	70	300	324	460	290	180	380	320	1473	100
ECD-B 17		16,5		TP1315-70 T100LA-12/4	0,37/1,1		3500	4090							500		1592	100
ECD-B 18		22,5		TP1315-86 T100LA-12/4		400	4000	4630	85	340	365	550	370	200	640	406	1732	137
ECD-B 19		28,5		FA87 SDT100LS-8/2-BM2/Z	0,45/1,80		4200	4830							710		1801	137
ECD-B 20	16	10,5	20/6	TP1315-70 T100LA-12/4	0,37/1,1	320	3500	4090	70	320	324	500	290	190	440	360	1532	117
ECD-B 21		16,5		TP1315-86 T100LA-12/4		400	3500	4130	85	340	365	520	370	200	510	380	1601	125
ECD-B 22		22,5		FA87 SDT100LS-8/2-BM2/Z	0,45/1,80		4000	4630				550			610	406	1700	137
ECD-B 23		28,5		FA87 SDT100L-8/2-BM2/Z	0,60/2,40		4200	4830		365		600		212	710	456	1800	151
ECD-B 24	20	10,5	20/6	FA87 SDT100LS-8/2-BM2/Z	0,45/1,80	400	3500	4130	85	340	365	550	370	200	460	406	1751	142
ECD-B 25		16,5					3500	4130							560		1849	151
ECD-B 26		22,5					4000	4630		365		600		212	660	456	1949	162
ECD-B 27		28,5		FA87 SDT100L-8/2-BM2/Z	0,60/2,40		4200	4830							760	452	2048	178

Remarks:

*) R_{st}^{max} - Maximum static loading (kN)

$$R_{st}^{max} \approx \frac{1}{2}\left[\frac{G_{crane}}{2} + (Q+G_{crab})\right].10 \text{ (kN)}$$

Where:
G_{crane} - crane dead weight (t);
Q - crane rated capacity (t);
G_{crab} - crane crab weight (t)

**) Ouput revolutions of the gear units FA87 ... - n_a = 4/17 min^{-1}

3. SINGLE GIRDER STANDING CRANES - LIGHT TYPE

3.1. Main parameters and dimensions

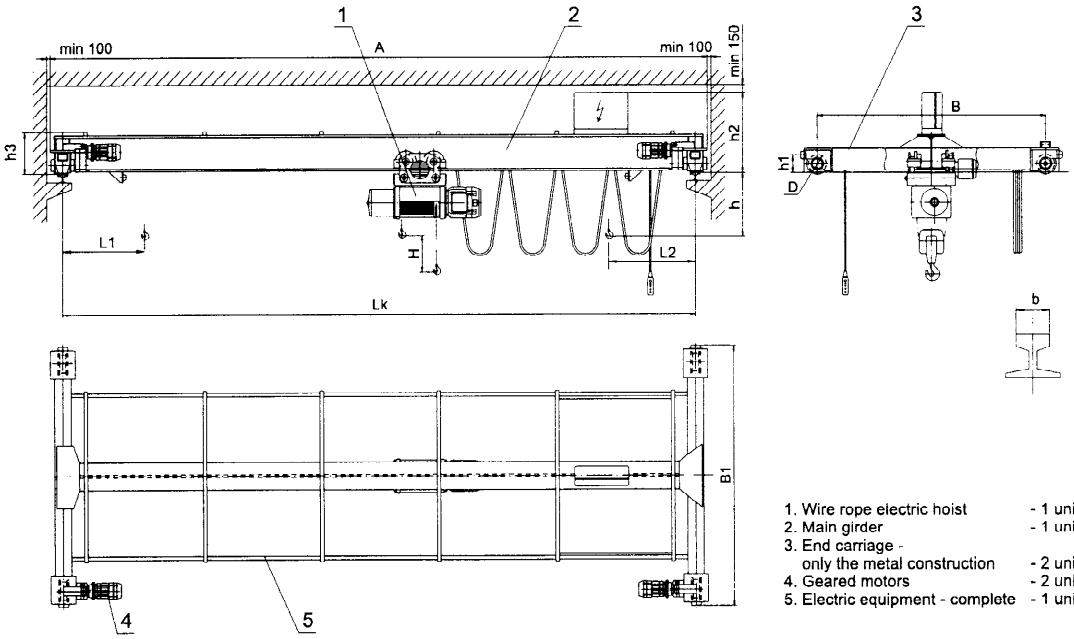

1. Wire rope electric hoist - 1 unit
2. Main girder - 1 unit
3. End carriage - only the metal construction - 2 unit
4. Geared motors - 2 unit
5. Electric equipment - complete - 1 unit

Designation	Capacity, Q	Span Lk	Lifting height H	Speeds			Dimensions									Rmax (Maximum pressure on travel wheel)
				of lift	of crab	of crane	A	B	B1	D	b	h	h1	h2	h3	
-	t	m		m/min			mm									kN
MEA 1/7,5	1	7,5	5 ... 51	8	20	20/6	7740	1600	1938	160	40	990	160	735	335	11,5
MEA 1/10,5		10,5		8/2	20/6		10740	2000	2338			1010		735	335	13
MEA 1/13,5		13,5					13740	2700	3038			1025		755	355	14
MEA 1/16,5		16,5														
MEA 2/7,5	2	7,5	5 ... 45	8	20	20/6	7740	1600	1938	160	40	1190	160	735	335	19
MEA 2/10,5		10,5		8/2	20/6		10740	2000	2338			1210		775	375	20
MEA 2/13,5		13,5					13740	2700	3038			1210		795	395	21
MEA 2/16,5		16,5														
MEA 3,2/7,5	3,2	7,5	5 ... 37	8	20	20/6	7740	1600	1938	160	40	1260	160	775	375	27
MEA 3,2/10,5		10,5		8/2	20/6		10740	2000	2338			1265		805	405	28
MEA 3,2/13,5		13,5					13740	2700	3038			1255		875	475	30
MEA 3,2/16,5		16,5														
MEA 5/7,5	5	7,5	7 ... 40	8	20	20/6	7740	1600	1938	160	40	1535	160	805	405	38
MEA 5/10,5		10,5		8/2	20/6		10740	2000	2338			1530		865	465	40
MEA 5/13,5		13,5					13740	2700	3038			1540		895	495	41
MEA 5/16,5		16,5														
MEA 6,3/7,5	6,3	7,5	5 ... 18	4	20	20/6	7770	1600	1978	200	50	1210	200	865	465	46
MEA 6,3/10,5		10,5		4/1	20/6		10770	2000	2378			1190		925	525	48
MEA 6,3/13,5		13,5					13770	2700	3078			1205		955	555	49
MEA 6,3/16,5		16,5														
MEA 8/7,5	8	7,5	7 ... 34	8	20	20/6	7770	1600	1978	200	50	1640	200	925	525	57
MEA 8/10,5		10,5		8/2	20/6		10770	2000	2378			1660		955	555	60
MEA 8/13,5		13,5					13824	2700	3196	250		1650	250	1015	615	61
MEA 8/16,5		16,5														

Remarks:

*) Sizes L1 and L2 depend on the hoist type and the lifting height

3.2. End carriages

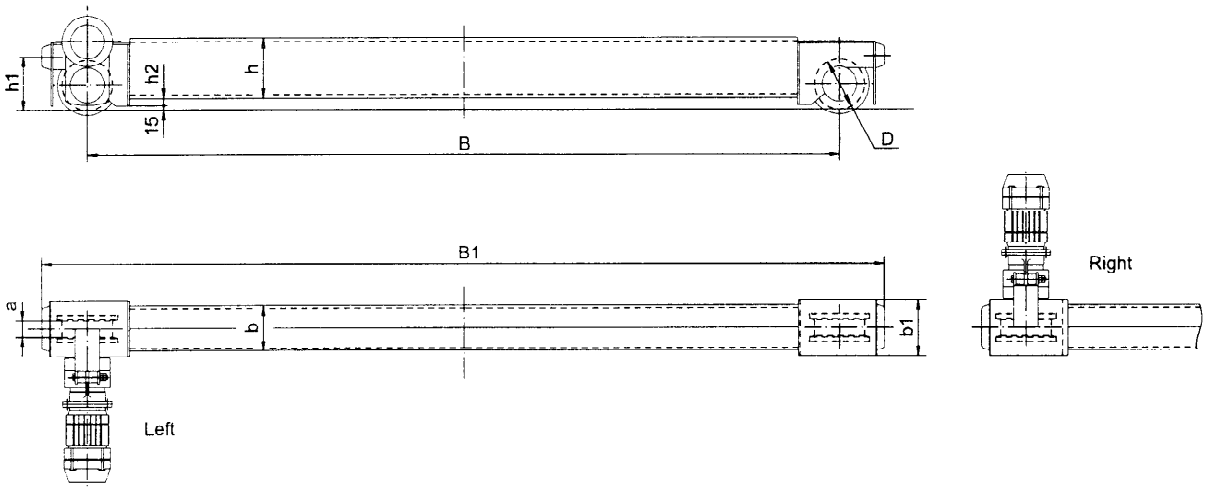

Designation	Capacity, Q	Span Lk	Speeds	Geared motor		Dimensions								
				Type	Output	D	B	B1	a	b	b1	h	h1	h2
-	t	m	m/min	-	kW	mm								
MEA 02-00	1	7,5	20/6	TP1160-35 T80A-12/4	0,08/0,25	160	1600	1938	55	116	240	140	160	60
MEA 02-01		10,5					2000	2338		128		160		40
MEA 02-02		13,5					2700	3038		140		180		20
MEA 02-03		16,5					3000	3338		152		200		35
MEA 02-04	2	7,5	20/6	TP1160-35 T80B-12/4	0,12/0,37	160	1600	1938	55	128	240	160	160	40
MEA 02-05		10,5					2000	2338		140		180		20
MEA 02-06		13,5					2700	3038		164		220		20
MEA 02-07		16,5					3000	3338		164		220		20
MEA 02-08	3,2	7,5	20/6	TP1200-35 T90S-12/4	0,18/0,55	160	1600	1938	55	152	240	200	160	40
MEA 02-09		10,5					2000	2338		164		220		30
MEA 02-10		13,5					2700	3038		180		240		40
MEA 02-11		16,5					3000	3338		190		270		40
MEA 02-12	5	7,5	20/6	TP1200-35 T90S-12/4	0,18/0,55	160	1600	1938	55	164	240	220	160	30
MEA 02-13		10,5					2000	2338		180		240		30
MEA 02-14		13,5					2700	3038		190		270		20
MEA 02-15		16,5					3000	3338		200		300		20
MEA 02-16	6,3	7,5	20/6	TP1250-46 T90S-12/4	0,18/0,55	200	1600	1978	65	164	270	220	200	30
MEA 02-17		10,5					2000	2378		180		240		50
MEA 02-18		13,5					2700	3078		200		300		30
MEA 02-19		16,5					3000	3378		200		300		30
MEA 02-20	8	7,5	20/6	TP1250-46 T90S-12/4	0,18/0,55	200	1600	1978	65	180	270	240	200	50
MEA 02-21		10,5					2000	2378		190		270		30
MEA 02-22		13,5		TP1250-54 T90S-12/4	0,18/0,55	250	2700	3196		210	324	330	250	40
MEA 02-23		16,5					3000	3496		220		360		30
MEA 02-24	10	7,5	20/6	TP1250-54 T90S-12/4	0,18/0,55	250	1600	2096	65	220	324	360	250	30
MEA 02-25		10,5					2000	2496		220		360		30
MEA 02-26		13,5					2700	3196		230		400		30
MEA 02-27		16,5					3000	3496		230		400		30

4. SINGLE GIRDER SUSPENSION OVERHEAD TRAVELING CRANES

4.1. Main parameters and dimensions

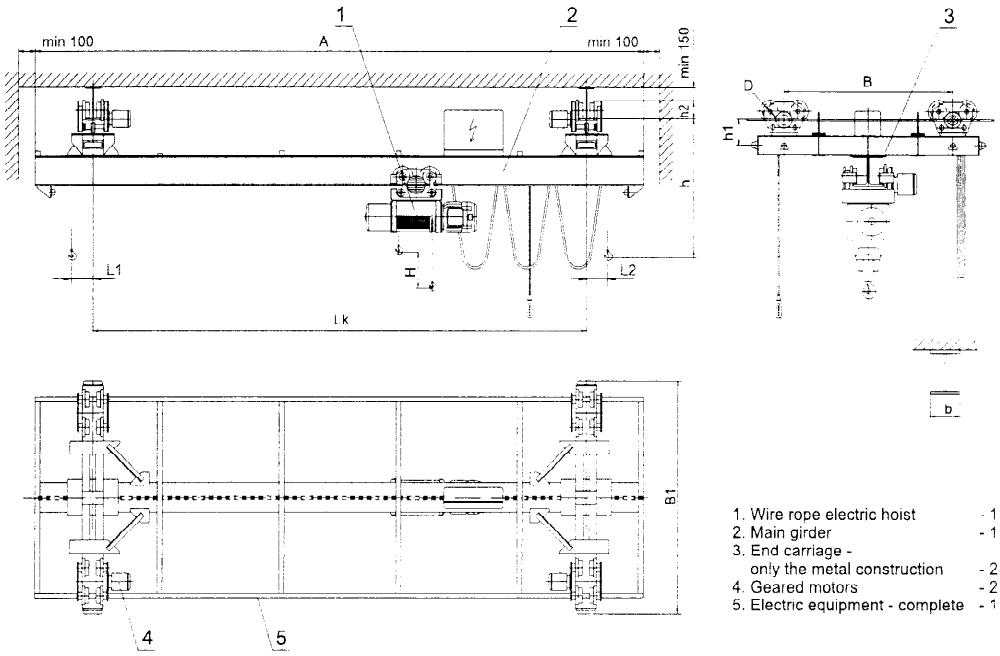

1. Wire rope electric hoist - 1 unit
2. Main girder - 1 unit
3. End carriage - only the metal construction - 2 unit
4. Geared motors - 2 unit
5. Electric equipment - complete - 1 unit

Designation	Capacity, Q	Span Lk	Lifting height H	Speeds			Dimensions								Rmax (Maximum pressure on travel wheel)
				of lift	of crab	of crane	A	B	B1	D	b	h ~	h1	h2	
-	t	m		m/min			mm								kN
MES 0,5/7	0.5	7	6 ... 51	8	20	20/6	8000	1200	1720	100	90 ... 130	1370	190	132	7
MES 0,5/10		10		8/2	20/6		12400	1700	2200			1410			7,5
MES 0,5/12		12					14400	2000	2520			1430			8
MES 1/7	1	7	6 ... 51	8	20	20/6	8000	1200	1720	100	130 ... 150	1390	190	132	10,5
MES 1/10		10		8/2	20/6		12400	1700	2200			1430			11,5
MES 1/12		12					14400	2000	2520			1450			12
MES 2/7	2	7	5 ... 45	8	20	20/6	8000	1200	1770	125	130 ... 150	1630	220	155	17
MES 2/10		10		8/2	20/6		12400	1700	2270			1670			18
MES 2/12		12					14400	2000	2570			1710			19,5
MES 3,2/7	3,2	7	5 ... 37	8	20	20/6	8000	1200	1770	125	130 ... 150	1720	220	155	25
MES 3,2/10		10		8/2	20/6		12400	1700	2340	160		1795	265	187	26
MES 3,2/12		12					14400	2000	2640			1815			27
MES 5/7	5	7	7 ... 40	8	20	20/6	8000	1200	1840	160	130 ... 150	2085	265	187	36
MES 5/10		10		8/2	20/6		12400	1700	2340			2125			37
MES 5/12		12					14400	2000	2640			2165			38
MES 8/7	8	7	7 ... 37	8	20	20/6	8000	1200	1840	160	130 ... 150	2255	265	187	56
MES 8/10		10		8/2	20/6		12400	1700	2340			2295			57
MES 8/12		12					14400	2000	2640			2345			58

Remarks:

*) Sizes L1 and L2 depend on the hoist type and the lifting height

4.2. End carriages

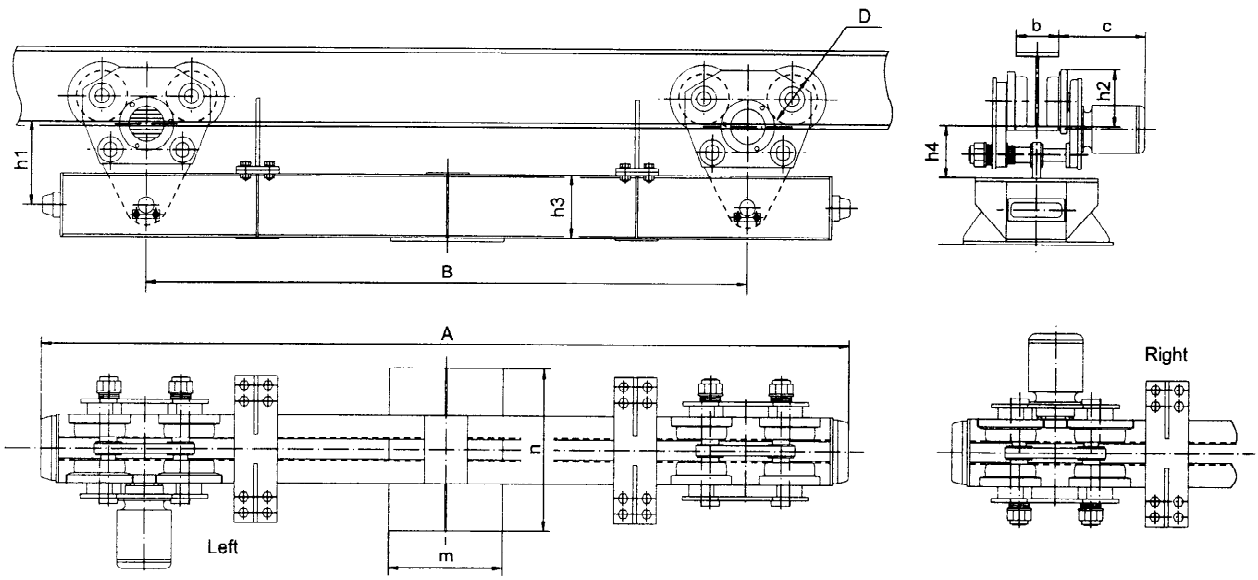

Designation	Capacity, Q	Span Lk	Speeds	Monorail crane crab			Dimensions										
				Type	El. motor, type	Output	A	B	D	b	c max	h1	h2	h3	h4	m	n
-	t	m	m/min	-	-	kW	mm										
MES 01-00	0,5	7	20/6	EK 100 B	KK 1405-12/4A	0,06/0,18	1720	1200	100	90 ... 130	310	190	132	120	130	220	445
MES 01-01		10					2220	1700						120		260	
MES 01-02		12					2520	2000						140		280	457
MES 01-03	1	7	20/6	EK 100 B	KK 1405-12/4	0,06/0,18	1720	1200	100	90 ... 130	310	190	132	120	130	240	445
MES 01-04		10					2220	1700						140		280	457
MES 01-05		12					2520	2000						160		300	469
MES 01-06	2	7	20/6	EK 125 B	KK 1407-12/4	0,11/0,37	1770	1200	125	130 ... 150	360	220	155	140	148	280	462
MES 01-07		10					2270	1700						160		320	474
MES 01-08		12					2570	2000						180		360	486
MES 01-09	3,2	7	20/6	EK 125 B	KK 1407-12/4	0,11/0,37	1770	1200	125	130 ... 150	360	220	155	160	148	300	474
MES 01-10		10		EK 160 B	KK 1407-12/4	0,11/0,37	2340	1700	160		365	265	187	200	165	360	512
MES 01-11		12					2640	2000						200			
MES 01-12	5	7	20/6	EK 160 B	KK 1407-12/4	0,11/0,37	1840	1200	160	130 ... 150	365	265	187	200	165	360	512
MES 01-13		10					2340	1700						220			524
MES 01-14		12					2640	2000						240			540
MES 01-15	8	7	20/6	EK 160 B	KK 1407-12/4	0,11/0,37	1840	1200	160	130 ... 150	365	265	187	220	165	360	524
MES 01-16		10					2340	1700						270			550
MES 01-17		12					2640	2000						300			560

5. DOUBLE RAIL CRANE CRABS

5.1. Light type

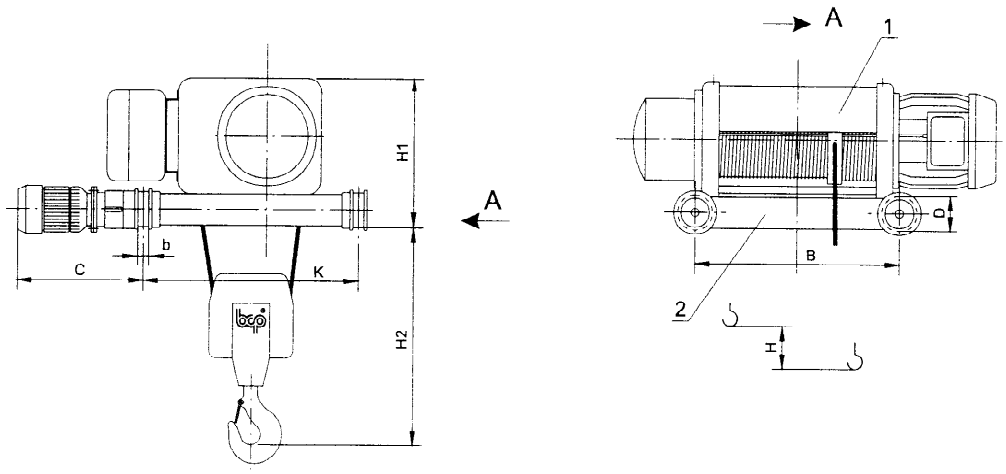

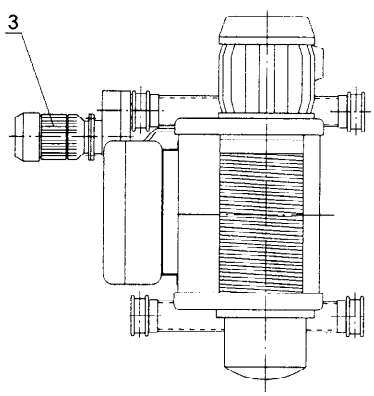

1. Wire rope electric hoist - (1 unit)
2. Frame with travel wheels - (1 unit)
3. Geared motor - (1 unit)

Capacity	Height of lift H *)	Speed		K	B *)	H1	H2	c max	D	b
		of lift	of travel							
t	m	m/min		mm						
2	6 ... 24	8/2	20/5	1000	431 ... 2075	536	415	480	160	50
3,2		8/2		1000		536	620	480	160	50
4		4/1		1000		536	710	480	160	50
5		8/2		1000		602	510	480	160	50
6.3		4/1		1000		536	840	760	160	50
8		8/2		1000		700	840	760	160	50
10		4/1		1000		602	1100	800	160	50
12,5		8/2		1200		740	840	760	200	60
16		4/1		1200		740	1100	800	200	60
20		3,2/0,8		1400		740	1100	800	250	60

Remarks:

*) Depends on the hoist type, the lifting height and the reeving.

5.2. With two lift

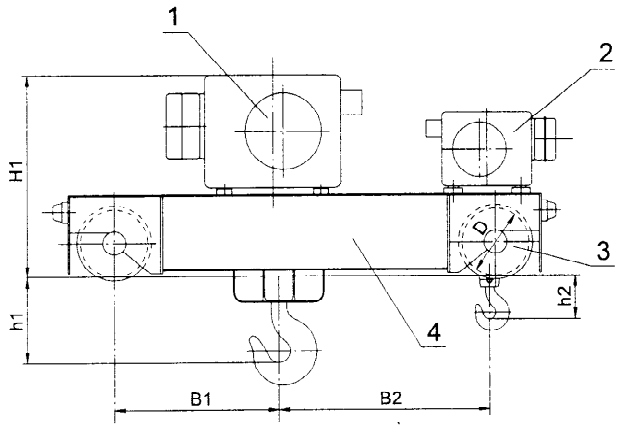

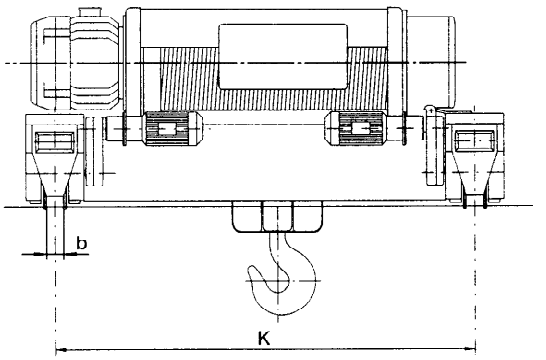

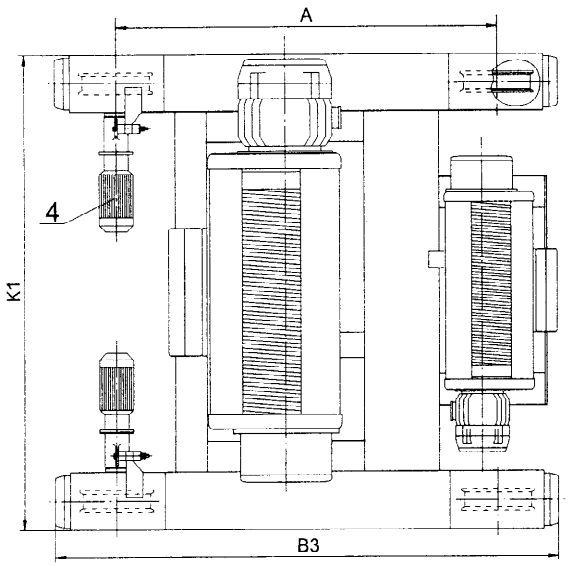

1. Wire rope electric hoist (main lift) - (1 unit)
2. Wire rope electric hoist (auxilliary lift) - (1 unit)
3. Geared motors - (2 units)
4. Block travel wheels - (2 units - driving and 2 units - driven)
5. Frame - (1 units)

Main parameters and dimensions

Capacity Q (main/aux.), t	Height of lift (main/aux.), m	Speeds, m/min			Dimensions, mm										
		main lift	aux. lift	Travel	K	A	B1	B2	B3	K1	H1	h1	h2	D	b
16/3,2	14/17	4/1				~1760	715	825		2270	870	190	280	250	65
20/5	14/17	3,2/0,8	8/2	20/6	2000	~1820	783	822	2400	2275	963	515	295	320	70
32/8	14/17	2,2/0,5				~1920	805	900		2285	1053	425	335	400	85

Components

Capacity Q (main/aux.), t	Pos. 1	Pos. 2	Pos. 3	Pos. 4
	Electric hoist (main lift) - (1 unit)	Electric hoist (aux. lift) - (1 unit)	Geared motors - (2 units)	Block travel wheels - (2 units - driving and 2 units - driven)
16/3,2	MH 7-40 4/1 H14 V4/1	MHM 5-16 2/1 H17 V8/2	TP1200-54 T90S-12/4R BRII	2 x MAM250 and 2 x MAL250
20/5	MH 7-50 4/1 H14,5 V3,2/0,8	MH 6-25 2/1 H16,5 V8/2	TP1200-69 T90S-12/4R BRII	2 x MAM320 and 2 x MAL320
32/8	MH 7-80 4/1 H14,5 V2,2/0,5	MH 7-40 2/1 H16,5 V8/2	TP1250-88 T90L-12/4R BRII	2 x MAM400 and 2 x MAL400

6. BLOCK TRAVEL WHEELS

Diagram

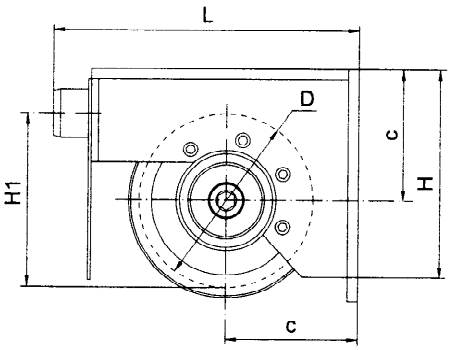

Type MAM ... - drive

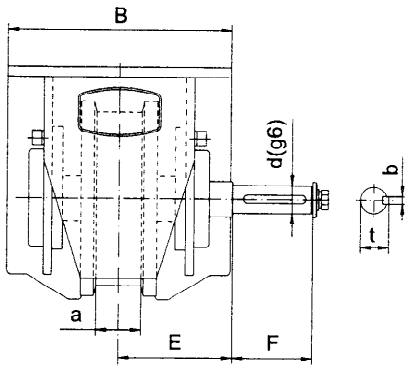

Type MAL ... - driven

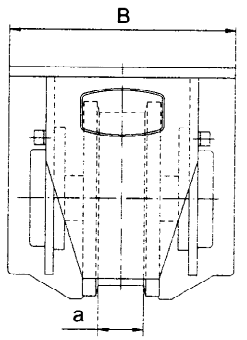

Designation	Dimensions												Weight
	D	L	H	H1	B	a	c	d	E	F	b	t	
-	mm												kg
MAM 125	125	288	172	132	200	55	125	30	103	95	8	33	28
MAL 125								-	-	-	-	-	27
MAM 160	160	304	200	160	240	55	160	30	123	95	8	33	40
MAL 160								-	-	-	-	-	39
MAM 200	200	354	250	200	270	65	165	40	138	116	12	43	68
MAL 200								-	-	-	-	-	66
MAM 250	250	438	300	250	324	65	190	40	165	116	12	43	94
MAL 250								-	-	-	-	-	92
MAM 320	320	526	375	291	324	70	230	50	165	140	14	53,5	167
MAL 320								-	-	-	-	-	164
MAM 400	400	596	465	370	365	85	280	50	185,5	140	14	53,5	236
MAL 400								-	-	-	-	-	232

Remarks:
*) When placing an order the customer has to give sizes d, F, b and t, if they are different from the sizes in the table

7. MAXIMUM ADMISSIBLE STATIC LOADINGS ON TRAVEL WHEEL - Rmax (kg) AND TORQUES - M (Nm)

D	Rail	Resource To	Mode of operation	Rmax						M	
				Speed, m/min							
				10	20	30	40	50	60	Mnom	Mmax
mm		hours	-	kg						Nm	
125	□40	800	1Am	4200	3800	3700	3400	3100	2800	288	1384
		1600	2m	3400	3000	2800	2500	2100	1800		
		3200	3m	2900	2700	2500	2300	2000	1700		
		6300	4m	2400	2200	2000	1800	1600	1400		
		12500	5m	2000	1800	1600	1400	1200	1000		
160	□40	800	1Am	4800	4300	4100	4000	3800	3600	288	1384
		1600	2m	4300	4100	3600	3400	3200	3000		
		3200	3m	3600	3300	2900	2700	2500	2300		
		6300	4m	3100	2700	2400	2100	1900	1700		
		12500	5m	2600	2200	1900	1600	1400	1200		
200	□50	800	1Am	6900	6700	6400	5000	4800	4600	684	3284
		1600	2m	6000	5900	5100	4500	4200	3900		
		3200	3m	4900	4800	4100	3800	3400	3000		
		6300	4m	4000	3900	3100	2800	2500	2200		
		12500	5m	3100	3000	2200	1900	1500	1300		
250	□50	800	1Am	8800	8600	8500	8300	8000	7500	684	3284
		1600	2m	8700	8500	7700	7000	6000	5000		
		3200	3m	8300	7000	6200	5600	5000	4000		
		6300	4m	7000	5600	4800	4400	4000	3500		
		12500	5m	5000	4600	3800	3400	2800	2000		
320	□50	800	1Am	11500	11300	10800	10700	10500	10200	1328	6378
		1600	2m	11200	10900	10500	10000	9000	8500		
		3200	3m	10800	10000	8500	8000	7000	6000		
		6300	4m	8500	7900	6800	6200	5200	4600		
		12500	5m	7000	6400	5300	4700	3700	2900		
400	□70	800	1Am	16300	15800	15200	14300	13400	12000	1328	6378
		1600	2m	14800	14400	13800	13100	12400	11 000		
		3200	3m	12500	11 900	11 500	11 000	10000	9000		
		6300	4m	10800	10000	9000	8300	7500	6200		
		12500	5m	9400	8500	7500	6800	5500	4500		

BALKANCARPODEM Ltd.
1040 Sofia, Bulgaria
18, Kliment Ohridski Blvd.
Tel. +359 2 975 33 95
Fax +359 2 975 30 89
e-mail: mail@bcp.bg
http: \\www.bcp.bg

200908